SMD Aluminum Electrolytic Capacitors

AEH Series

FEATURES

- Endurance: 125°C, 2000 to 5000 hours
- Designed for surface mounting on high density PC board
- RoHS Compliance and Halogen-free

APPLICATIONS

- DC/DC Convectors, for high density SMD boards and higher operation temperature environment applications

LEAD-FREE
LEAD-FREE COMPATIBLE COMPONENT

RoHS COMPLIANT

HOW TO ORDER

A	EH	1010	470	M	010	R	-
Product Type	**Series Type**	**Case Size**	**Capacitance Code**	**Tolerance**	**Rated DC Voltage**	**Packaging**	**Special**
Aluminum		See table below	µF code: 1st two digits represent significant figures, 3rd digit represents multiplier (number of zeros to follow)	M = ±20%	010 = 10Vdc 016 = 16Vdc 025 = 25Vdc 035 = 35Vdc 050 = 50Vdc 063 = 63Vdc 080 = 80Vdc 250 = 250Vdc 400 = 400Vdc 450 = 450Vdc	R = 13" Reel (D ≥ 12.50mm) R = 15" Reel (D ≤ 10.00mm) (Material details available upon request)	No Code = std

CASE DIMENSIONS millimeters (inches)

Code	D±0.50 (0.020)	L±0.50 (0.020)	W±0.20 (0.008)	H±0.20 (0.008)	C±0.20 (0.008)	R	P±0.30 (0.012)	V max	Typical Weight (g)
0608	6.30 (0.248)	8.00 (0.315)	6.60 (0.260)	6.60 (0.260)	7.30 (0.287)	0.50 - 0.80 (0.020 - 0.031)	2.00 (0.080)	0.30 (0.012)	0.41
0810	8.00 (0.315)	10.50 (0.413)	8.30 (0.327)	8.30 (0.327)	9.00 (0.354)	0.70 - 1.10 (0.028 - 0.043)	3.20 (0.126)	0.30 (0.012)	0.85
0812	8.00 (0.315)	12.50 (0.492)	8.30 (0.327)	8.30 (0.327)	9.00 (0.354)	0.70 - 1.10 (0.028 - 0.043)	3.20 (0.126)	0.30 (0.012)	0.90
1010	10.00 (0.394)	10.50 (0.413)	10.30 (0.406)	10.30 (0.406)	11.00 (0.433)	0.70 - 1.30 (0.028 - 0.051)	4.50 (0.177)	0.30 (0.012)	1.14
1012	10.00 (0.394)	12.50 (0.492)	10.30 (0.406)	10.30 (0.406)	11.00 (0.433)	0.70 - 1.30 (0.028 - 0.051)	4.50 (0.177)	0.30 (0.012)	1.41
1013	10.00 (0.394)	13.50 (0.531)	10.30 (0.406)	10.30 (0.406)	11.00 (0.433)	0.70 - 1.30 (0.028 - 0.051)	4.50 (0.177)	0.30 (0.012)	1.40
1016	10.00 (0.394)	16.50 (0.650)	10.30 (0.406)	10.30 (0.406)	11.00 (0.433)	0.70 - 1.30 (0.028 - 0.051)	4.50 (0.177)	0.30 (0.012)	1.50
1213	12.50 (0.492)	13.50 (0.531)	13.00 (0.512)	13.00 (0.512)	13.70 (0.539)	1.00 - 1.40 (0.039 - 0.055)	4.50 (0.177)	0.40 (0.016)	2.70
1216	12.50 (0.492)	16.00 (0.630)	13.00 (0.512)	13.00 (0.512)	13.70 (0.539)	1.00 - 1.40 (0.039 - 0.055)	4.50 (0.177)	0.40 (0.016)	3.30

MARKING

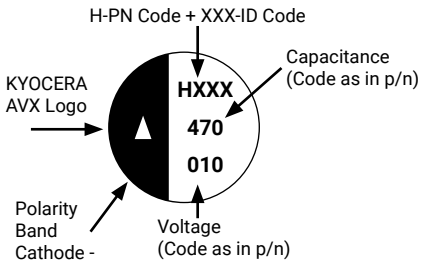

TECHNICAL SPECIFICATIONS

Category Temperature Range:	-55°C to + 125°C (10 - 80V), -40°C to + 125°C (250 - 450V)			
Capacitance Range	At 25°C, 120Hz	2.2µF to 470µF		
Capacitance Tolerance:	At 25°C, 120Hz	±20%		
Dissipation Factor (%)	Measurement Frequency: 120Hz at 25°C	Please see the ratings and part number reference table below		
Leakage Current	Rated voltage at 25°C	10 - 80V		250 - 450V
		0608 - 1013	1213 - 1616	I ≦ 0.04CV + 100µA (1minute)
		I ≦ 0.01CV or 3µA, whichever is greater (2min)	I ≦ 0.03CV or 4µA, whichever is greater (2min)	

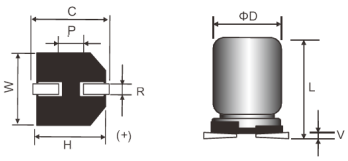

The Important Information/Disclaimer is incorporated in the catalog where these specifications came from or available online at www.kyocera-avx.com/disclaimer/ by reference and should be reviewed in full before placing any order.

CAPACITANCE AND RATED VOLTAGE RANGE (FIGURES DENOTES CASE SIZE)

Capacitance		Rated Voltage DC (V_R)									
µF	Code	10V	16V	25V	35V	50V	63V	80V	250V	400V	450V
2.2	2R2									0810	0810
3.3	3R3										0812
4.7	4R7								1010	1010	1010
6.8	6R8									1013	
10	100					0608				1016	
22	220					0608					
33	330					0608					
47	470			0608	0608	0810		1010			
100	101	0608	0608, 0810	0810	0810	1010	1012				
220	221	0608		1010	1010	1012, 1213					
330	331			1010		1216					
470	471	1010	1012	1213	1216						

Released ratings

RATINGS & PART NUMBER REFERENCE

Part No.	Case Size	Capacitance (µF)	Rated Voltage (V)	DF Max. (%)	100kHz RMS Current (mA)	MSL
10 Volt						
AEH0608101M010R	0608	100	10	24	110	1
AEH0608221M010R	0608	220	10	24	110	1
AEH1010471M010R	1010	470	10	24	296	1
16 Volt						
AEH0608101M016R	0608	100	16	20	110	1
AEH0810101M016R	0810	100	16	20	220	1
AEH1012471M016R	1012	470	16	20	340	1
25 Volt						
AEH0608470M025R	0608	47	25	16	110	1
AEH0810101M025R	0810	100	25	16	220	1
AEH1010221M025R	1010	220	25	16	296	1
AEH1010331M025R	1010	330	25	16	296	1
AEH1213471M025R	1213	470	25	16	750	1
35 Volt						
AEH0608470M035R	0608	47	35	14	110	1
AEH0810101M035R	0810	100	35	14	220	1
AEH1010221M035R	1010	220	35	14	296	1
AEH1216471M035R	1216	470	35	14	900	1
50 Volt						
AEH0608100M050R	0608	10	50	14	83	1
AEH0608220M050R	0608	22	50	14	83	1
AEH0608330M050R	0608	33	50	14	83	1
AEH0810470M050R	0810	47	50	14	160	1
AEH1010101M050R	1010	100	50	14	247	1
AEH1012221M050R	1012	220	50	14	350	1
AEH1213221M050R	1213	220	50	14	550	1
AEH1216331M050R	1216	330	50	14	700	1
63 Volt						
AEH1012101M063R	1012	100	63	12	270	1
80 Volt						
AEH1010470M080R	1010	47	80	12	245	1
250 Volt						
AEH10104R7M250R	1010	4.7	250	24	59	1
400 Volt						
AEH08102R2M400R	0810	2.2	400	30	30	1
AEH10104R7M400R	1010	4.7	400	30	65	1
AEH10136R8M400R	1013	6.8	400	30	90	1
AEH1016100M400R	1016	10	400	30	102	1
450 Volt						
AEH08102R2M450R	0810	2.2	450	30	30	1
AEH08123R3M450R	0812	3.3	450	30	32	1
AEH10104R7M450R	1010	4.7	450	30	40	1

All technical data relates to an ambient temperature of +25C. Capacitance and DF are measured at 120Hz, 0.5RMS with DC bias of 2.2 volts.
DCL is measured at rated voltage after 5 minutes.

The Important Information/Disclaimer is incorporated in the catalog where these specifications came from or available online at www.kyocera-avx.com/disclaimer/ by reference and should be reviewed in full before placing any order.

FREQUENCY COEFFICIENT OF PERMISSIBLE RIPPLE CURRENT

Rated Voltage (Vdc)	Capacitance (μF)	120 - 1K (Hz)	1K - 10K (Hz)	10K - 100K (Hz)	100K(Hz)
10 - 80	Cap. < 220	0.40	0.75	0.90	1.00
	220 ≤ Cap. < 470	0.50	0.85	0.94	1.00
250 - 450	Cap. ≤ 33	0.55	0.83	0.97	1.00
	Cap. > 33	0.66	0.86	0.93	1.00

Internal heating produced by ripple current will reduce the lifetime of capacitors, at a rate of halving the lifetime with every 5°C rise.
When long life performance is required in actual use the rms ripple current should be minimized.

REFLOW

Diameter (mm)	Φ6.3	Φ8	Φ10	Φ12.5
Peak Temperature	260°C, 5 sec. max.			
Preheat Temperature	100°C to 200°C, 180 sec. max.			100°C to 180°C, 150 sec. max.
Duration at 200°C or higher	90 sec. max.	90 sec. max.	60 sec. max.	60 sec. max.
Duration at 230°C or higher	40 sec. max.	30 sec. max.	30 sec. max.	30 sec. max.
Reflow Number	Twice* or less			

*if twice then need to be at least 2hrs between reflows

QUALIFICATION TABLE

Test	AEH series (-55°C to + 125°C (10 - 80V), -40°C to + 125°C (250 - 450V))											
	Condition	Characteristics										
Low Temperature Characteristics (Max. Impedance Ratio)	At 120Hz	Rated Voltage (V)		10	16	25	35	50	63	80	250	400-450
		0608-1016	Z(-25°C)/Z(+20°C)	3	2	2	2	2	2	2	6	6
			Z(-40°C)/Z(+20°C)	6	4	4	3	3	3	3	10	18
		1213-1216	Z(-25°C)/Z(+20°C)	4	3	2	2	2	2	2	6	6
			Z(-40°C)/Z(+20°C)	8	6	4	3	3	3	3	10	18
Endurance	The specifications shall be met when the capacitors are restored to 20°C after rated voltage is applied for a specified period of time at 125°C. Load life: 0608 (10-50V) 1000 hours 0810-1016 (10-80V) 2000 hours 1213-1216 (10-80V) 5000 hours 0810-1216 (250-450V) 3000 hours	ΔC/C		≦ ±30% of the initial limit								
		DF		≦ 300% of the initial specified limit								
		DCL		≦ Initial specified limit								
Shelf Life	The following specifications shall be satisfied when the capacitors are restored to 20°C after leaving them under no load at 125°C for 1,000 hours (450V: 500 hours)	ΔC/C		≦ ±30% of the initial limit								
		DF		≦ 300% of the initial specified limit								
		DCL		≦ 500% of the initial specified limit								

Tested in accordance to AEC-Q200

STORAGE

1. It is recommended to keep capacitors between the ambient temperatures of 5°C to 35°C (if between 35°C to 85°C, it should be less than three months) and the relative humidity of 75% or below.
2. Confirm that the environment does not have any of the following conditions:
   - Damp conditions such as water, saltwater spray, oil spray or fumes. High humidity or humidity condensation situations.
   - In an atmosphere filled with toxic gasses (such as hydrogen sulfide, sulfurous acid, nitrous acid, chlorine, ammonia, etc.).
   - Being exposed to direct sunlight, ozone, ultraviolet ray, or radiation.
   - Being exposed to acidic or alkaline solutions.
   - Under severe conditions where vibration and / or mechanical shock exceed the applicable ranges of the specification.
3. Shelf life

Years		
0-1	1-2	>2
Ok	Ok	Performance check

- Years from manufacturing date code.
- KYOCERA AVX does not guarantee or assume responsibility for product behavior after 3 years of storage.
- Ageing procedure should be performed as follows:
  - Connect the capacitor in series to a 1kΩ resistor, and apply half rated voltage for 2 hours.
  - After half rated voltage for 2 hours applied, increase and apply rated voltage for another 2 hours.

PACKAGE TAPE DIMENSIONS units (mm)

Size Code	A±0.20	B±0.20	W±0.30	F±0.10	E±0.10	P±0.10	t±0.10	T±0.20
0608	7.0	7.0	16.0	7.5	1.75	12.0	0.4	8.0
0810	8.7	8.7	24.0	11.5	1.75	16.0	0.4	11.0
0812	8.7	8.7	24.0	11.5	1.75	16.0	0.4	13.0
1010	10.7	10.7	24.0	11.5	1.75	16.0	0.4	11.0
1012	10.7	10.7	24.0	11.5	1.75	16.0	0.4	13.0 - 13.5
1013	10.7	10.7	24.0	11.5	1.75	16.0	0.4	15.0
1016	10.7	10.7	24.0	11.5	1.75	16.0	0.4	17.5
1213	13.4	13.4	32.0	14.2	1.75	24.0	0.4	14.5
1216	13.4	13.4	32.0	14.2	1.75	24.0	0.4	16.5

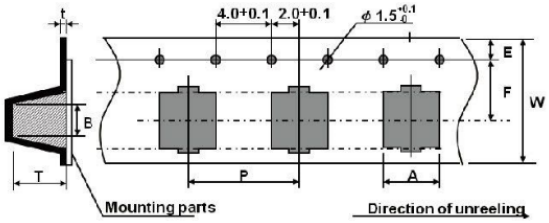

REEL

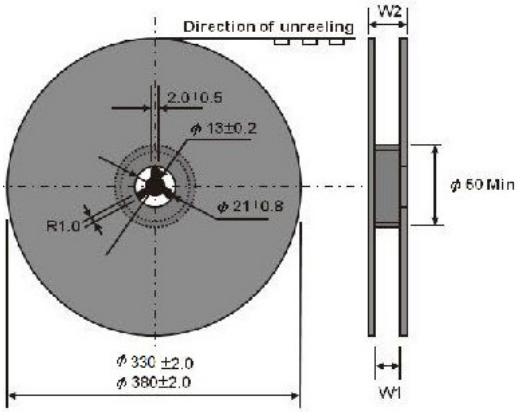

POLARITY

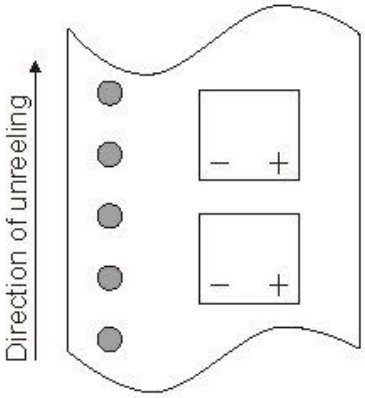

DIMENSIONS units (mm)

Size Code	W1±1.00	W2±1.00	Qty./Reel	Reel Size (inches)
0608	18.0	22.0	1000	15
0810	18.0	22.0	550	15
0812	26.0	31.0	550	15
1010	26.0	31.0	550	15
1012	26.0	31.0	500	15
1013	26.0	31.0	450	15
1016	26.0	31.0	350	15
1213	34.0	39.0	200	13
1216	34.0	39.0	150	13

RECOMMENDED LAND PATTERN DIMENSION OF PCB

Size Code	A (mm)	B (mm)	C (mm)
0608	1.9	3.5	1.6
0810	3.1	4.2	2.2
0812	3.1	4.2	2.2
1010	4.5	4.4	2.2
1012	4.5	4.4	2.2
1013	4.5	4.4	2.2
1016	4.5	4.4	2.2
1213	4.0	5.7	2.5
1216	4.0	5.7	2.5

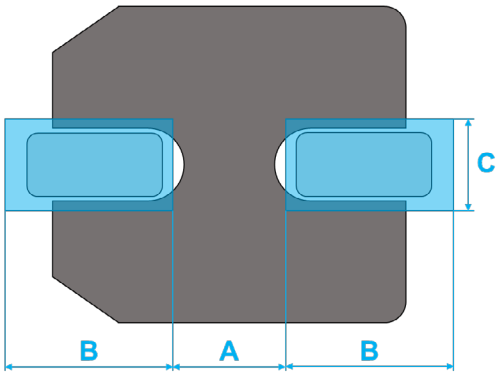

The Important Information/Disclaimer is incorporated in the catalog where these specifications came from or available online at www.kyocera-avx.com/disclaimer/ by reference and should be reviewed in full before placing any order.